INTRODUCING THE FLOJET AC VARIABLE SPEED DRIVE PUMP SERIES



Quad Model

Duplex II Model

The Flojet AC VSD Series Pumps

The Flojet AC VSD Pump Series automatically adjusts in real time to changes in flow due to the number of valves in operation, filter back pressure, and changes in working fluid viscosity… so you don't have to.

The AC VSD Constant Pressure Pump System matches motor speed to system demand. As more liquid is needed, the motor responds to increase flow. Conversely, as the demand lessens, the motor slows to a "super quiet" speed, always maintaining a constant system pressure. The result is exceptionally stable flow and reduced amp draw.

FLOJET®

TYPICAL BEVERAGE INSTALLATION

Coffee Cart/Kiosk

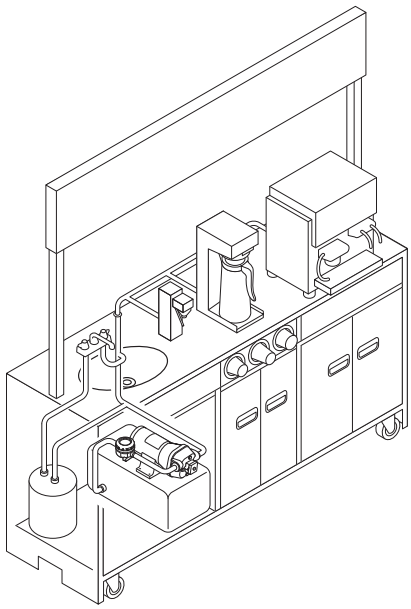

Commercial Water Boost

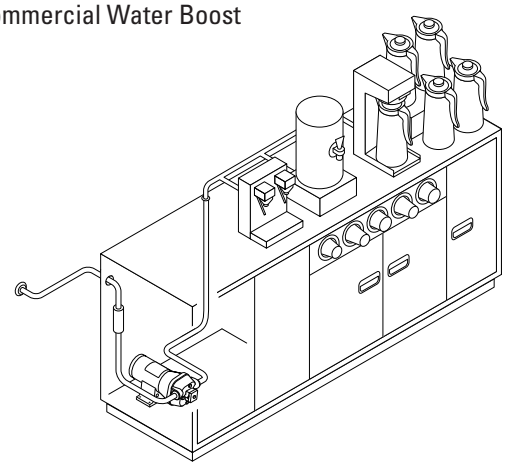

The new Flojet AC VSD pumps provide stable, constant-pressure operation on any AC application. Operation from no flow to maximum flow is proportionally controlled, eliminating unwanted pump switch cycling and the need for an accumulator tank. The AC VSD sensor-controlled pumps match motor speed to system demand – as more liquid is needed, the motor responds to increase flow. Conversely, as the demand lessens, the motor slows to a lower speed, always maintaining constant system pressure.

SPECIAL FEATURES

- Maintains steady fluid pressure in response to variable flow demand
- No pressure switch
- Conserves energy, low amp draw
- Quiet running under normal use
- Automatically adjusts motor speed to maintain pressure
- Improves overall system performance
- Eliminates bulky accumulator tank for limited space requirements

MODEL NUMBERS

Duplex II Models (Pump with VSD Module)

D4635H8011A	115 VAC	3 12" Wires
D4835H8011A	115 VAC	Cable with Plug
D4735H8011A	230 VAC	3 12" Wires
D4935H8011A	230 VAC	Cable with Plug

Quad Models (Pump with VSD Module)

04524-043A	115 VAC	3 12" Wires
04524-500A	115 VAC	Cable with Plug
R4524-243A	230 VAC	3 12" Wires
R4524-501A	230 VAC	Cable with Plug

SPECIFICATIONS – DUPLEX II VSD

Pump Design	Positive Displacement Diaphragm (2 Piston)
Power Source	AC
Materials	Polypropylene housing, Santoprene* diaphragm, EPDM** check valves
Fluid Temperature Limits	130˚ F (55˚ C)
Weight	5.61 lbs. (2.54 kg.)
Motor	Permanent Magnet Rectified
Amp Draw, 115 V	0.78 Amps (@ 70 PSI)
Amp Draw, 230 V	0.43 Amps (@ 70 PSI)
Flow Rate, 115 V	1.9 GPM (7.3 LPM) - Open Flow
Flow Rate, 230 V	2.0 GPM (7.5 LPM) - Open Flow
Voltages	115/230 V
Cycles	60/50 Hz
Recommended Duty Cycle	Intermittent
Dimensions	3.63" H x 4.00" W x 8.38" L (92 mm x 102 mm x 213 mm)

* A Registered trademark of Monsanto Co.
** Consult factory for other materials

SPECIFICATIONS – QUAD VSD

Pump Design	Positive Displacement Diaphragm (4 Piston)
Power Source	AC
Materials	Polypropylene housing, Santoprene* diaphragm, EPDM** check valves
Fluid Temperature Limits	130˚ F (55˚ C)
Weight	6.63 lbs. (3.0 kg.)
Motor	Permanent Magnet Rectified
Amp Draw, 115 V	1.34 Amps (@ 40 PSI)
Amp Draw, 230 V	0.59 Amps (@ 40 PSI)
Flow Rate, 115 V	5.0 GPM (18.8 LPM) - Open Flow
Flow Rate, 230 V	4.4 GPM (16.8 LPM) - Open Flow
Voltages	115/230 V
Cycles	60/50 Hz
Recommended Duty Cycle	Intermittent
Dimensions	3.75" H x 6.30" W x 9.00" L (95 mm x 160 mm x 221 mm)

* A Registered trademark of Monsanto Co.
** Consult factory for other materials

DIMENSIONS inches (mm)

Duplex II Model

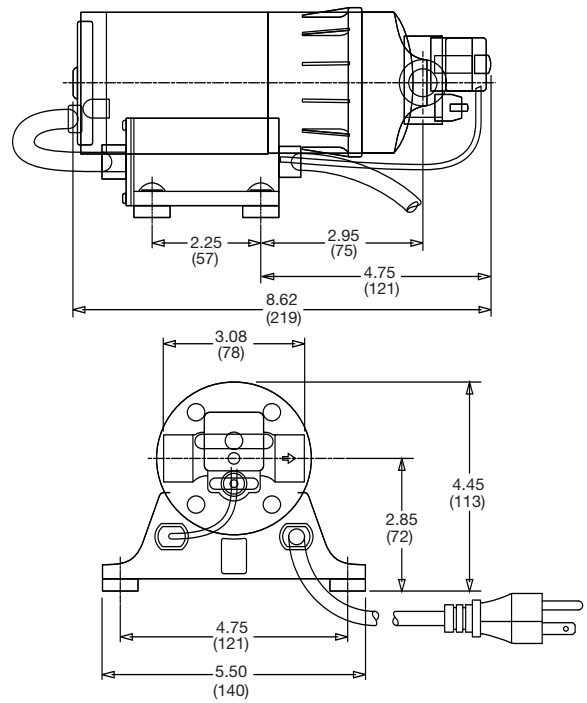

Quad Model

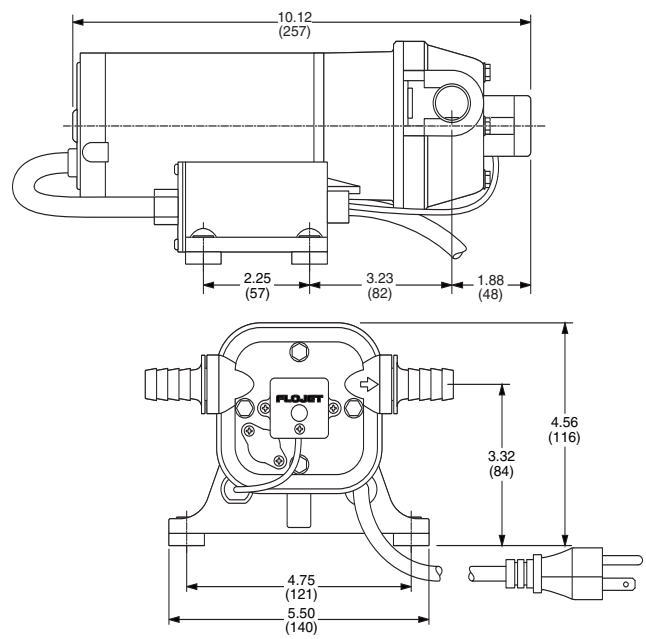

F100-292B_09-06.qxd:F100-292-AC VSD-05/04.qxd 1/6/09 12:25 PM Page 4

FLOJET DUPLEX II SERIES VSD
FLOJET QUAD SERIES VSD

SENSOR-CONTROLLED PUMPS WITH VARIABLE SPEED DRIVE TECHNOLOGY

PUMP PERFORMANCE

Duplex II 115VAC, 60 Hz

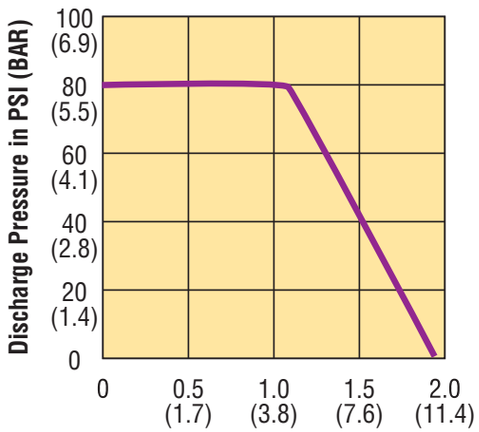

Quad 115VAC, 60 Hz

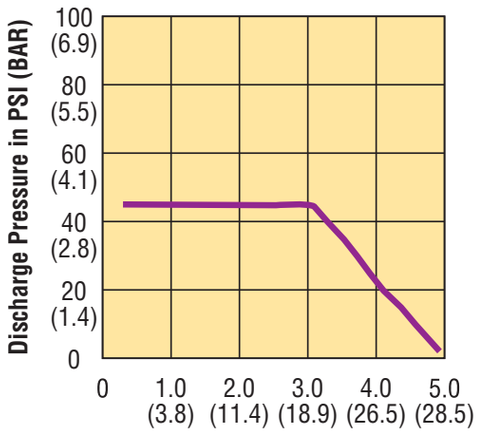

Duplex II 230VAC, 50 Hz

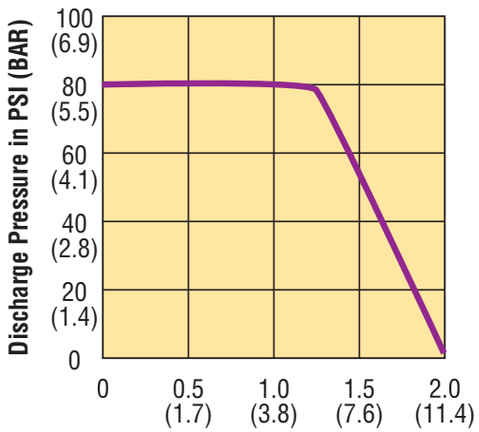

Quad 230VAC, 50 Hz

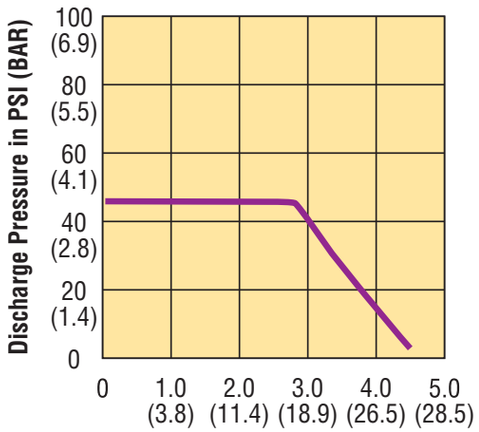

www.flojet.com

U.S.A.
Flojet
666 E. Dyer Road
Santa Ana, CA 92705
Tel: 714.557-4700
Fax: 714.628.8478

UNITED KINGDOM
Flojet
Bingley Road, Hoddesdon
Hertfordshire EN11 OBU
Tel: +44 (0) 1992 450145
Fax: +44 (0) 1992 467132

CANADA
Fluid Products Canada
55 Royal Road
Guelph, Ontario N1H 1T1
Tel: 519 821.1900
Fax: 519 821.2569

JAPAN
NHK Jabsco Company Ltd.
3-21-10, Shin-Yokohama
Kohoku-Ku, Yokohama, 222-0033
Tel: +81 045.475.8906
Fax: +81 045.477.1162

GERMANY
Jabsco GmbH
Oststrasse 28
22840 Norderstedt
Tel: +49-40-53 53 73 -0
Fax: +49-40-53 53 73 -11

ITALY
Jabsco Marine Italia
Via Tommaseo, 6
20059 Vimercate, Milano
Tel: +39 039 685 2323
Fax: +39 039 666 307

Copyright 2006 All Rights Reserved Printed in U.S.A. P/N F100-292 Rev. B 09/2006